STIEFELMAYER

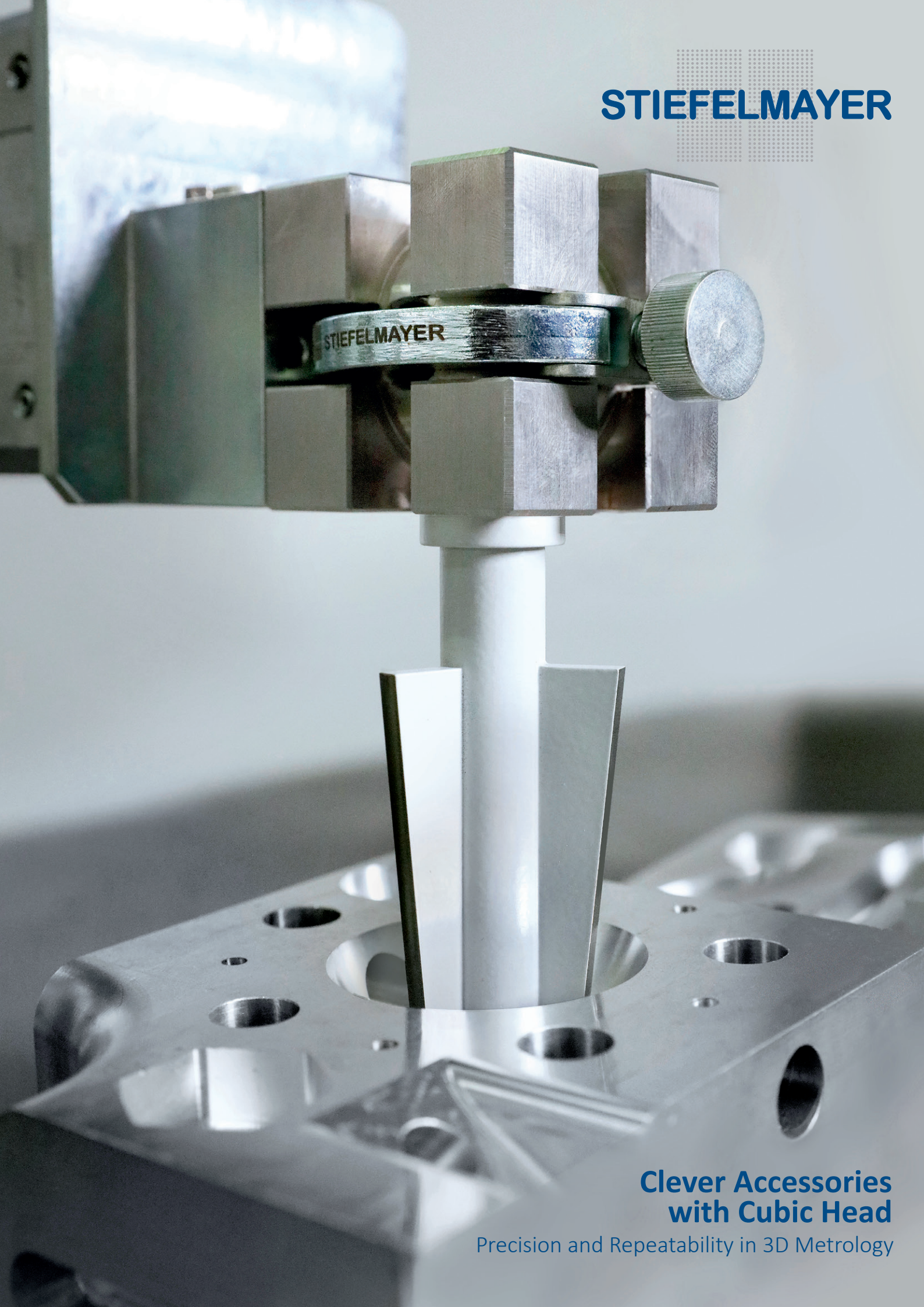

Clever Accessories with Cubic Head

Precision and Repeatability in 3D Metrology

Easy application, clever design

Stiefelmayer accessories – built to last

Standard metrology accessories need to be changed frequently due to wear. In contrast, Stiefelmayer long-lived high-quality solutions are built to last.

The clever Cubic Head solution in combination with the fixation insert enables various extensions and measuring tools to be attached in different directions.

Regardless of the orientation – downwards or upwards, leftwards, rightwards or to the front – the accuracy remains constantly below 10 µ. The Stiefelmayer Cubic Head never shows more play than this, even after many years it works as perfectly as on day one.

Added value by digital options – from static to multifunctional operation

All accessories and tools are now also available online in our eShop. You may get an overview regarding our product lines or send a direct request to our experts team with one click. Just try it by yourself – you can access our eShop by using the QR code at the bottom of the page.

Our innovative EASY Line wireless iPad visualization supports our accessories program with its easy-to-use project management: Any attachment of tools or extensions can be documented with descriptions and pictures, enabling all users to reproduce the installation at any time.

Layout and measuring tasks also in combination with milling operations

Even on the heavier milling machines the use of Stiefelmayer accessories is very easy, thanks to an additional counterweight for the Cubic Head. This unit has a very precise Hirth interlink to the horizontal arm. In the same way, also laser scanners may be connected to the horizontal arm in a fast and safe way.

EASY Line – wireless iPad visualization with measuring counter function, clear project management and numerous other functions

Flexible accessories available for attachment to the Stiefelmayer Cubic Head

There is a wide range of accessories available for attachment to the Cubic Head. Make sure to use original products from Stiefelmayer – they ensure durability and repeatability.

In our eShop you may find a lot of helpful information about our products. A few clicks and your ordered accessories are delivered to your company.

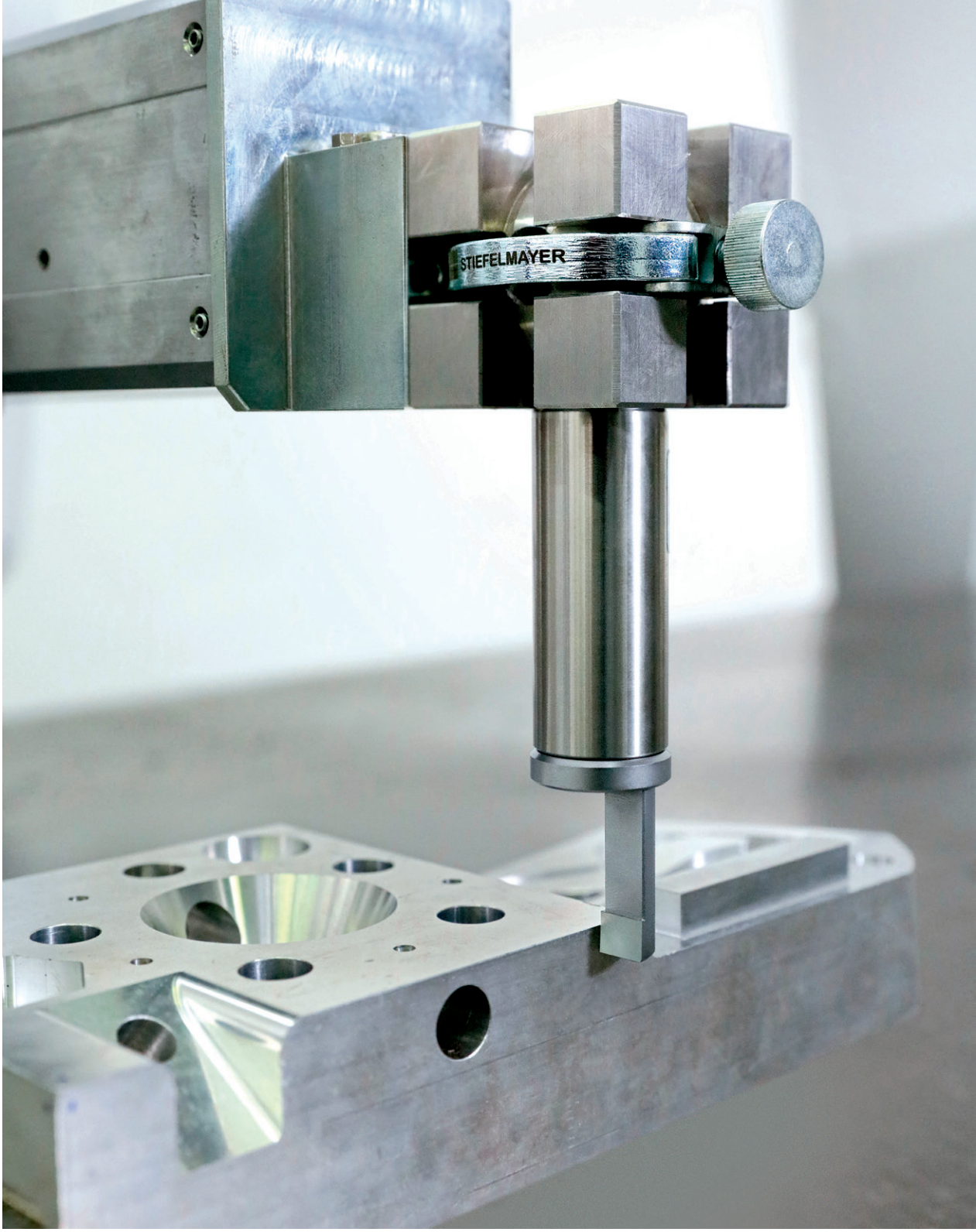

Positioning across corners and edges

The fixed tracing tools are the perfect fit for length measurement between two surfaces. The surfaces are probed with high precision using the Stiefelmayer measurement tools. As the tool only uses a 90° tail end it is always perfectly positioned to the middle of the Cubic Head. Various options like fixed or rotating tracing points are available. The latter can be used to work flexibly from any direction without having to change the tool installation. With the tapered probes thin or narrow areas can be detected. For every application and each workpiece you may find the fitting tool.

Tracing inserts and tracing points

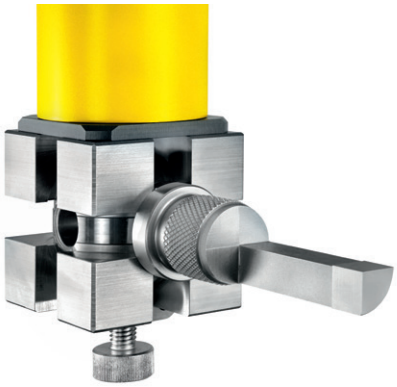

Fixed tracing insert
Art. No. 450210 / L 100 mm

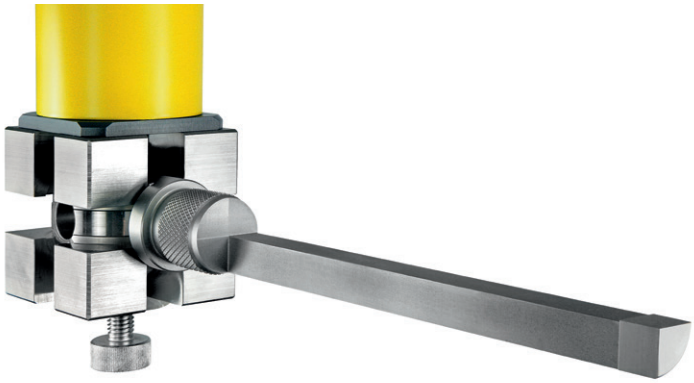

Fixed tracing insert
Art. No. 450211 / L 200 mm

Fixed tracing point
Art. No. 450096 / L 100 mm

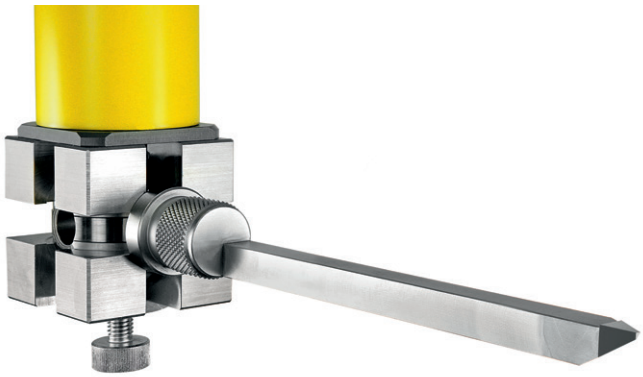

Fixed tracing point
Art. No. 450097 / L 200 mm

Rotating tracing insert
Art. No. 450209 / L 100 mm

Also available
Rotating tracing point
Art. No. 450102 / L 125 mm

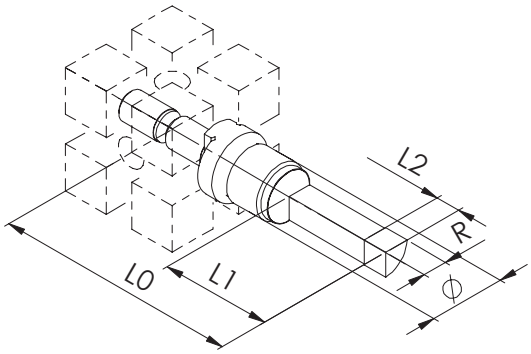

Dim. in mm	450210	450211
L0	100	200
L1	45,5	145,5
L2	10	10
R	10	10
Ø	22	22

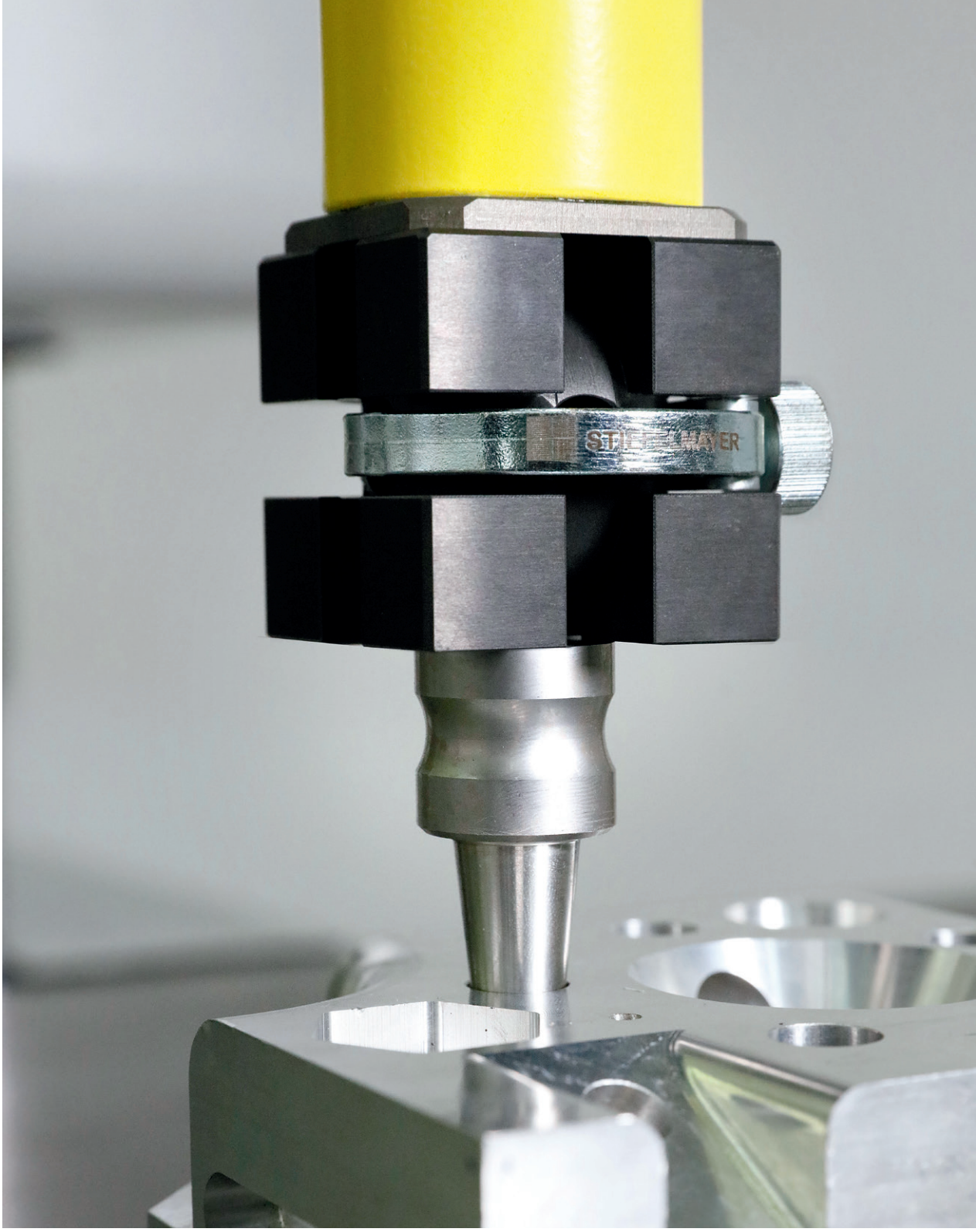

Positioning in holes and cavities

The tapered probe enables exact positioning in holes or cavities. For example the centre of a bore can be precisely identified relatively to a reference position. The distance between two bore centers may be measured as well with this clever measuring tool which is available in different designs. By using various diameters of the cone, positioning in smaller or larger holes is possible.

Tapered probes for diameter 2 to 60 millimeters

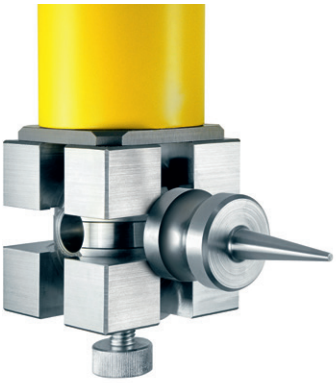

Tapered probe
Art. No. 450111 / Ø 2–7 mm

Tapered probe
Art. No. 450112 / Ø 7–15 mm

Tapered probe
Art. No. 450113 / Ø 15–27 mm

Tapered probe
Art. No. 450114 / Ø 27–40 mm

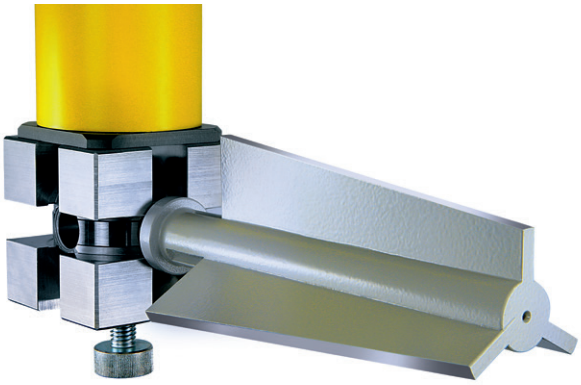

Tapered probe
Art. No. 450115 / Ø 40–60 mm

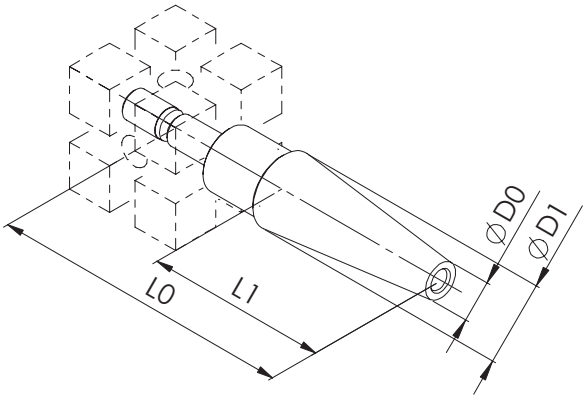

Dim. in mm	450111	450112	450113	450114	450115
Ø D0 – Ø D1	2 – 7	7 – 15	15 – 27	27 – 40	40 – 60
L0	101	120	145	135	175
L1	56	75	100	65	105

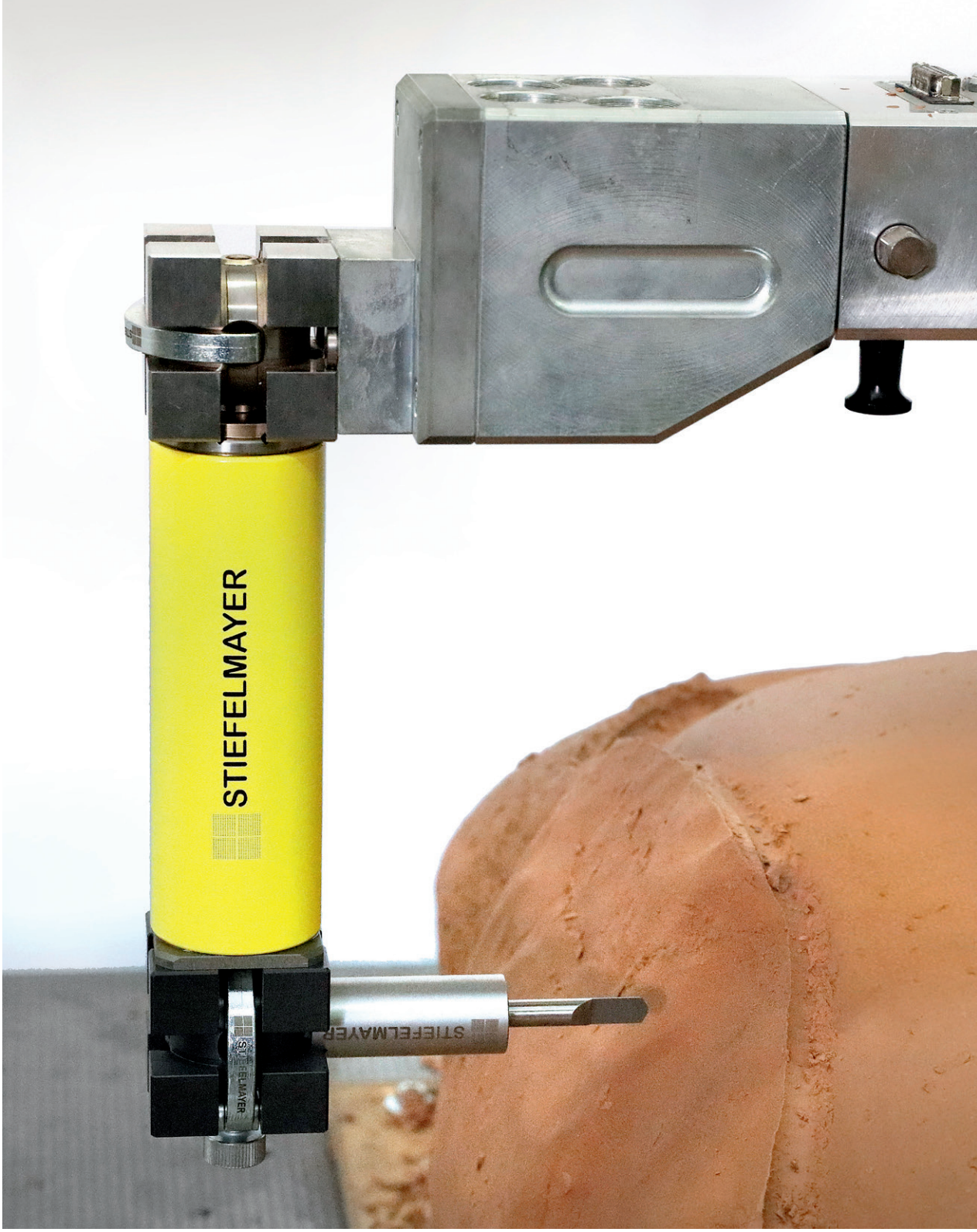

Many options for layout tasks

In order to further process larger components, for example in the area of iron casting, in tool engineering or in design studios for clay modelling, marking tools are an optimum fit in combination with manual or CNC/manual machines. The exchangeable scriber along with the fitting scriber holder may be used to do a point mark or a stroke mark. With the circular marking device round marks are possible. For marking large, rough and inhomogeneous surfaces of harder materials like cast iron, the spring-loaded scriber or the pneumatic drilling head are ideally suited.

Marking-out and drilling tools

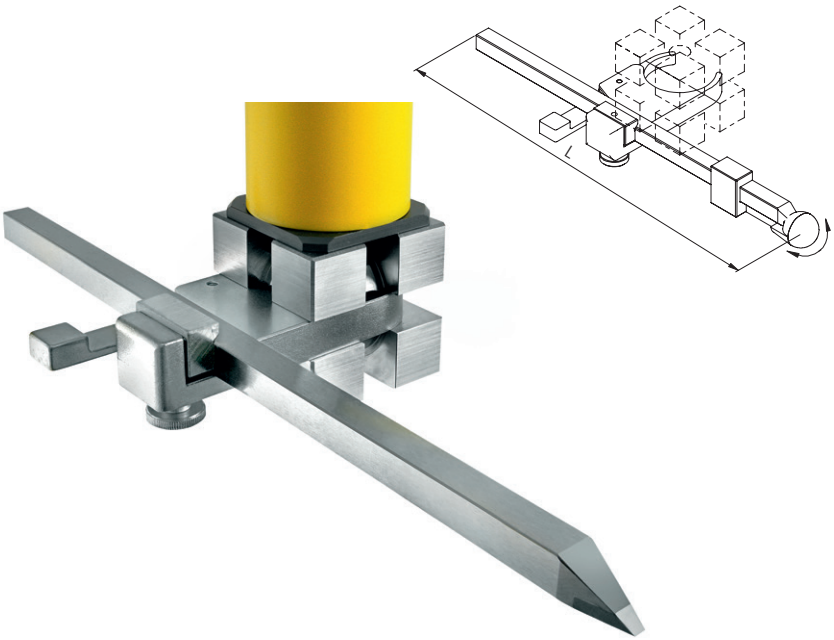

Scriber holder for scriber
made of tool steel with carbide tipped point
Art. No. 450213
The scriber holder can be used for all sorts of marking-out. The marking is carried out by tuning

Scriber made of tool steel with carbide tipped point
Art. No. 450182 / L 250 mm
Art. No. 450701 / L 300 mm
Art. No. 450702 / L 350 mm

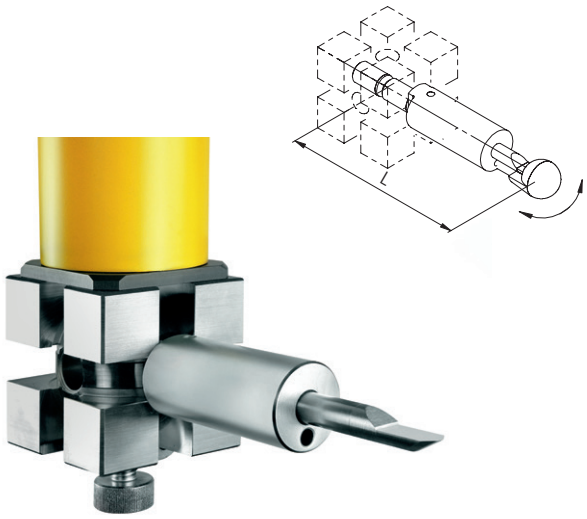

Spring-loaded scriber
Art. No. 450214 / L 112 mm

Replacement scriber for spring-loaded scriber
Art. No. 450221

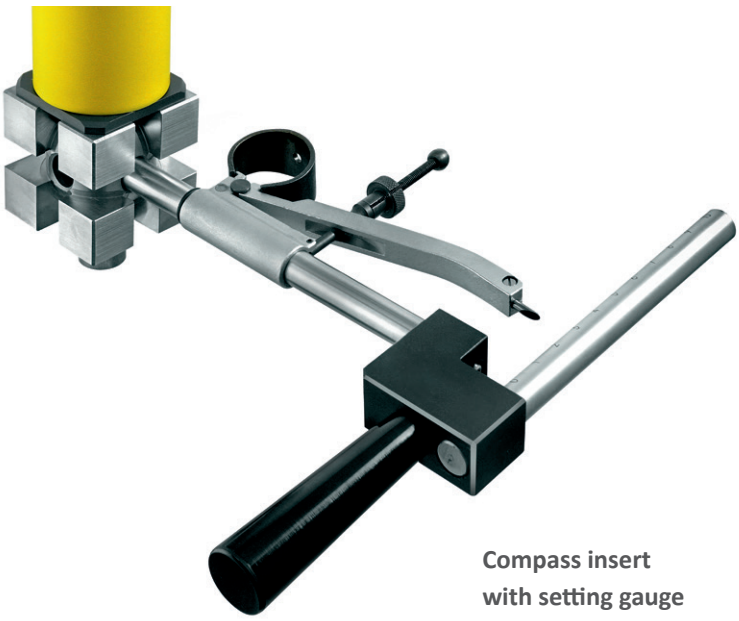

Compass insert
with setting gauge
Art. No. 450215
R 0–100 mm

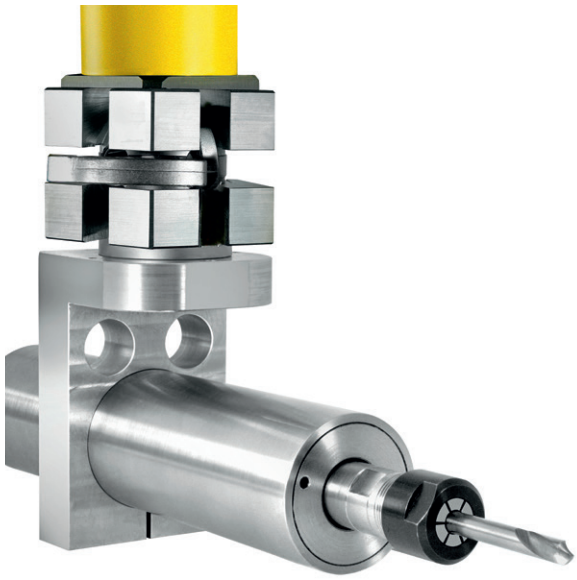

Pneumatic drilling head with holder
Art. No. 450750 / Rpm 1200 min^{-1}
Art. No. 450751 / Rpm 2400 min^{-1}
Art. No. 450752 / Rpm 2900 min^{-1}
Art. No. 450753 / Rpm 5200 min^{-1}
Art. No. 450754 / Rpm 19000 min^{-1}

For drilling holes in wood, modelling clay or aluminium. Slender design, small housing diameter (42 mm), power 380 Watt, air consumption 8,5 l/sec

Flexibility with efficient supporting tools

With the extension modules deep fixture or pipes may be measured or scanned inside. The extensions are available in different lengths and can be combined in flexible ways. The extensions in light-weight design contain a highly precise Cubic Head made of hard-anodising coated aluminium.

The location head with angle graduation allows to work with angles smaller than 90°. By using the clamping insert, the operator can connect various extensions to each other and also attach the final measuring tool to the Cubic Head, thus ensuring highly flexible and extremely efficient workflows.

Extensions and auxiliary means

Location head with extension – Light-weight

Art. No. 450431 / L 100 mm
Art. No. 450432 / L 200 mm
Art. No. 450433 / L 300 mm
Art. No. 450434 / L 400 mm
Art. No. 3488014 / L 500 mm
Art. No. 3488021 / L 1000 mm

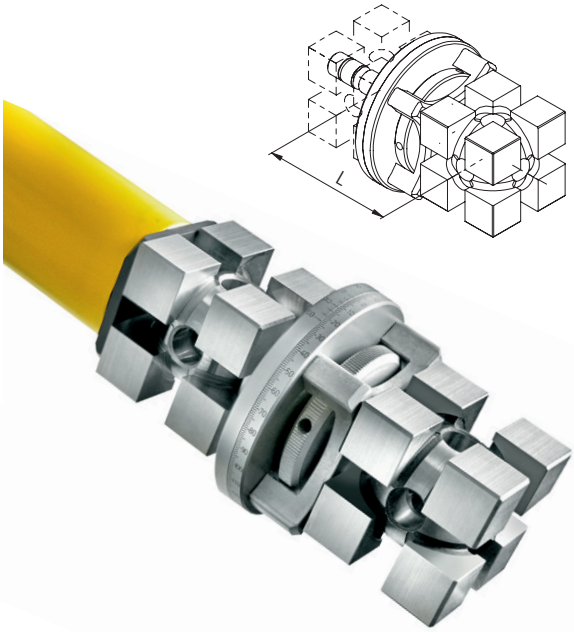

Location head with angle graduation
Art. No. 450184 / L 88 mm / Angle adjustable at will

Clamping insert
Art. No. 450021

Tactile measuring

By means of a special Stiefelmayer adapter, various manual and automized Renishaw probe heads may be attached to the Stiefelmayer Cubic Head. This provides the possibility to combine the complete range of Renishaw tactile probes with the Stiefelmayer system. The connecting module also enables the attachment of a corresponding laser scanner, e. g. from Nikon. Reference standards for tactile probes as well as for laser scanners are also part of our range of products.

Renishaw probe heads for tactile measuring and scanning

Renishaw
Probe head MIH
Art. No. on request

Renishaw
Probe head PH10
Art. No. on request

In addition to the probe heads shown above, Renishaw's complete range of measuring probes is available from us: Measuring probes TP6, TP20, probe extensions PEL 1-4, threaded styli with various lengths and ball diameters

Reference standards

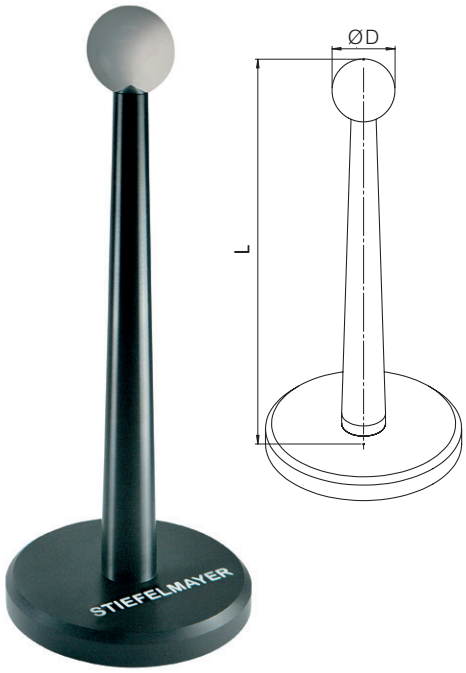

Reference ball HAM
Art. No. 450103 / L 370 mm / Ø D 50 mm

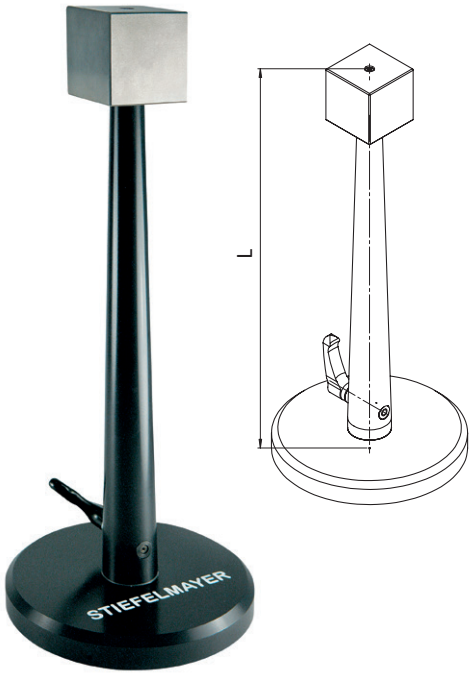

Reference cube HAM
Art. No. 450104 / L 370 mm / 50 x 50 x 50 mm

Overview and table of contents

Requirement	Description	Information
Positioning across corners and edges	Fixed tracing inserts and fixed tracing points	Pages 4 and 5
Positioning in holes and cavities	Tapered probes in various lengths and designs	Pages 6 and 7
Many options for layout tasks	Marking-out instruments in various lengths and designs	Pages 8 and 9
Flexibility with efficient supporting tools	Extensions and auxiliary means for the Cubic Head	Pages 10 and 11
Tactile measuring	Attachment of Renishaw probe heads for tactile measuring	Pages 12 and 13
Laser scanner	Laser scanner for attachment at horizontal arm	See FLEX Line
Milling heads	Milling heads for milling of soft materials	See FORM Line
Measuring counters and software	Display of measured values and automation	See EASY Line See software Polyworks See software Autodesk

Accessories	Specification
Fixed tracing insert	100 mm, 200 mm
Fixed tracing point	100 mm, 200 mm
Rotating element	Tracing insert, tracing point
Tapered probe, round	2–7 mm, 7–15 mm, 15–27 mm
Tapered probe, triangular	27–40 mm, 40–60 mm
Scriber	250 mm, 300 mm, 350 mm, scriber holder
Spring-loaded scriber	Scriber, replacement scriber
Drilling	1 200, 2 400, 2 900, 5 200, 19 000 min^{-1}
Assistance	Compass insert, setting gauge
Packages	Basic equipment, standard case
Extensions	100, 200, 300, 400, 500, 1 000 mm
Auxiliary means	Clamping insert, location head with angle graduation
Probe heads	MIH, PH10 ...
Measuring probes	TP6, TP20 ...
Probe extensions	PEL 1-4
Tracing inserts	Various lenghts and diameters
Reference standards	Cubes and balls
Packages	Basic equipment marking-out Marking-out standard case MIH complete and reference ball PH6/TP6 equipment PH10 high accuracy, PH10 medium accuracy PH10 high power, long
Change magazines	MCR20, ACR3 (MRS)
Laser scanner	Nikon L100, XC65Dx
	Reference balls 25 mm
	Other brands on demand (Kreon, Third Dimension ...)
Milling	MILL 20 manual, MILL 40 motorized
Packages	Milling set, tool setting probe
Security system	1-row, 2-row
Counter	MZ 2000, D-Count BT
Display	EASY Line iPad
Modules	Protocol, Augmented Reality, Remote, Accuracy Radar, Calculator
Software Polyworks	Inspector Probing, Inspector Probing++, Inspector Premium
Software Autodesk	PowerInspect, ClayMill (incl. PowerMill), Fusion 360

Stiefelmayer-Messtechnik GmbH & Co. KG
Rechbergstraße 42
D-73770 Denkendorf

Tel.: +49 (0) 711/ 93 440-602
Fax: +49 (0) 711/ 93 440-12
E-mail: messtechnik@stiefelmayer.de
www.stiefelmayer.de

00790205 04/2023